*P. DEL SORBO, J. GIRARDOT, F.DAU, I. IORDANOFF

Numerical analysis of Kevlar KM2 yarn subjected to transverse impact in high speed range

*Institute of Mechanics and Mechanical Engineering (I2M),
Dept. Durability of Materials, Assemblies and Structures
Esplanade des Arts et Metiers
F-33400 Talence, FRANCE

*Email: Pietro.DELSORBO@ensam.eu, Jeremie.GIRARDOT@ensam.eu, Frederic.DAU@ensam.eu, Ivan.IORDANOFF@ensam.eu

Generalities on Dry Fabrics

Application:

- Aeronautic
- Military
- Civil
- Structural Parts

Characteristics:

- High strength-to-weight ratio
- Damage Tolerance
- Impact resistance

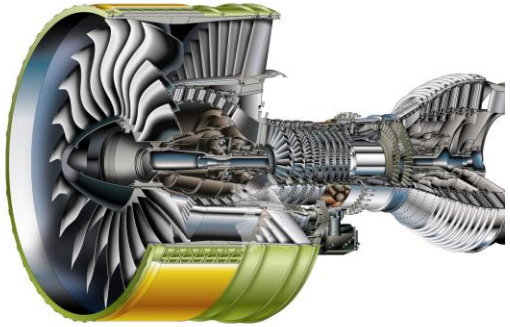

Pietro.DELSORBO@ensam.eu

Scientific Context and Objectives

Impact Problem on Dry Fabrics:

- **Multiscale** Problem
- **Experimental Complications**

FullComp Project ESR11:

Numerical analyses of high velocity impacts using **multiscale techniques**

- **Rigorously** analyse **scale transitions** starting **from the microscale**
- **Linking microstructural** observations to **mesoscopic and macroscopic properties**

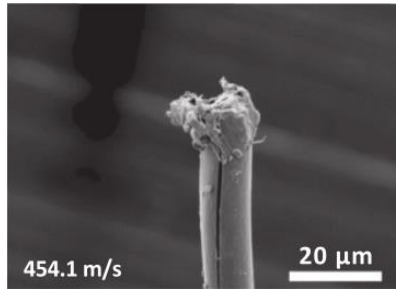

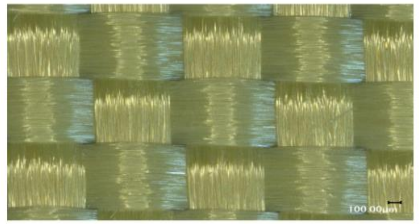

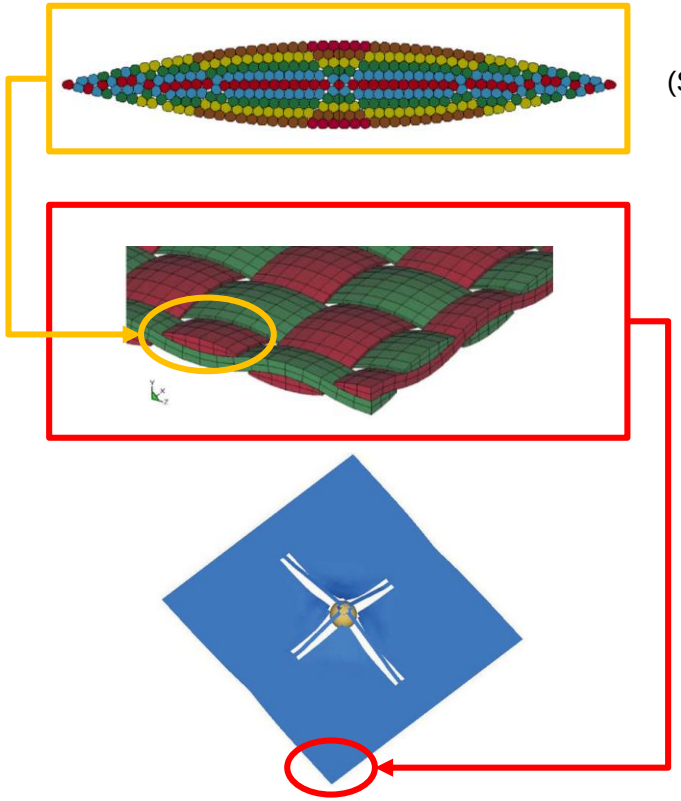

Microscale
(Sockalingam, 2014)

Mesoscale
(Duan, 2005)

Macroscale
(Ha-Minh, 2011)

Pietro.DELSORBO@ensam.eu

Outline

1. Transversal Impact on Flexible Filaments: an Introduction
2. **Transversal Impact on Single Fibre**
3. **Transversal Impact on Single Yarn, Long Period Analysis**
4. **Transversal Impact on Single Yarn, Short Period Analysis**
5. Conclusion and Perspectives

Transversal Impact on Flexible Filaments : An Introduction

Experimental Observations:

- Wave propagation phenomena (Stress and Speed)
- Ballistic Limit

Classical Analytical and Numerical Approaches:

- Transversal behaviour neglected
- Material Parameters regulation

- Global kinematic → Good agreement
- **Ballistic limit** → differs from experiments

Smith, 1958

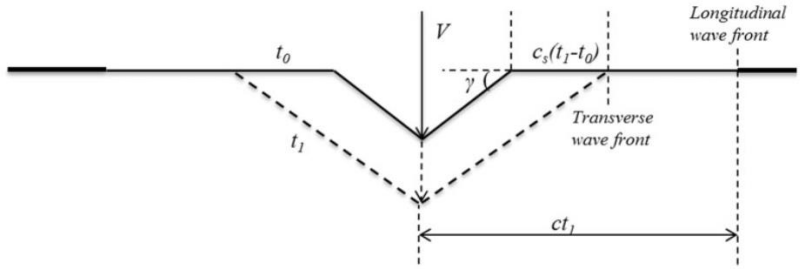

$$V = c\sqrt{2\epsilon\sqrt{\epsilon(1+\epsilon)} - \epsilon^2}$$

$$c_s = c\left(\sqrt{\epsilon(1+\epsilon)} - \epsilon\right)$$

$$c = \sqrt{\frac{E}{\rho}}$$

Song, 2011

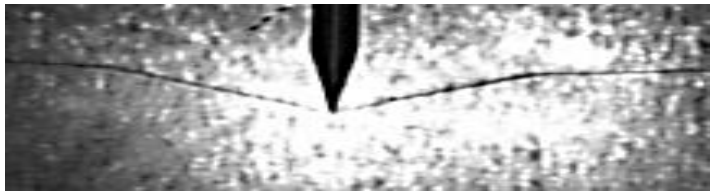

Chocron, 2010

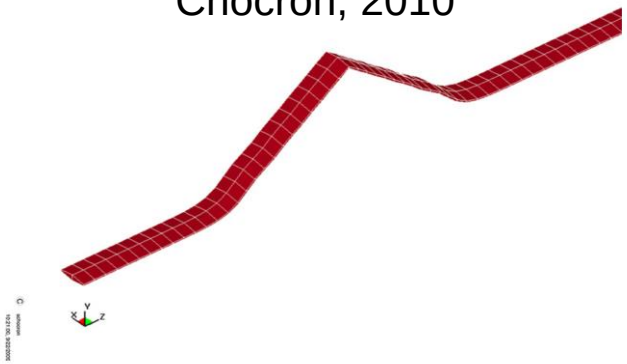

Pietro.DELSORBO@ensam.eu

Transversal Impact on Flexible Filaments : Why Discrete Approach ?

Pros:

- Fibre level modelling
- Yarn transverse behaviour is naturally modelled
- True stresses
- Large strains and large displacements are easily treated

Cons:

- Computational cost
- Experimental validation

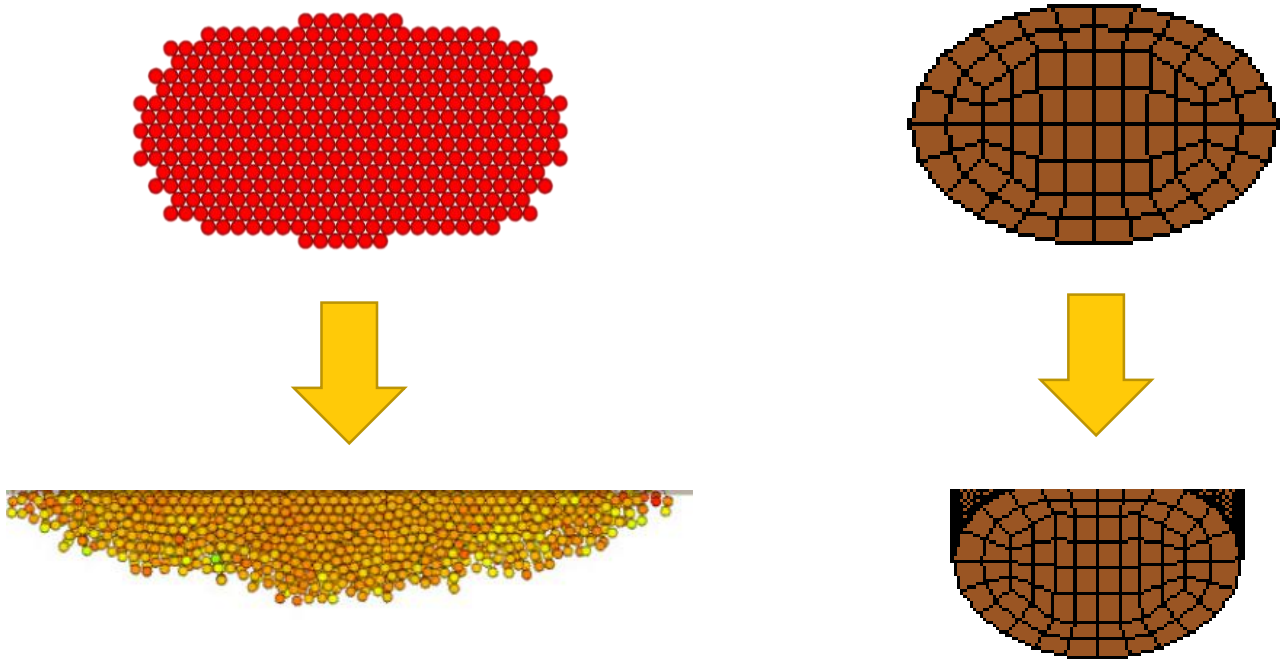

Pietro.DELSORBO@ensam.eu

Transversal Impact on Flexible Filaments : Fibre Model

Model has been solved using **DE code GranOO***.

Each **fibre** is discretized by a **series of spherical Discrete Elements***:

- Total fibre **weight is equally distributed** among Discrete Elements
- Material **Mechanical Behaviour** is provided by **Bonds** which connect DE couples
- **Contact** is easily managed by **Discrete Element Method**

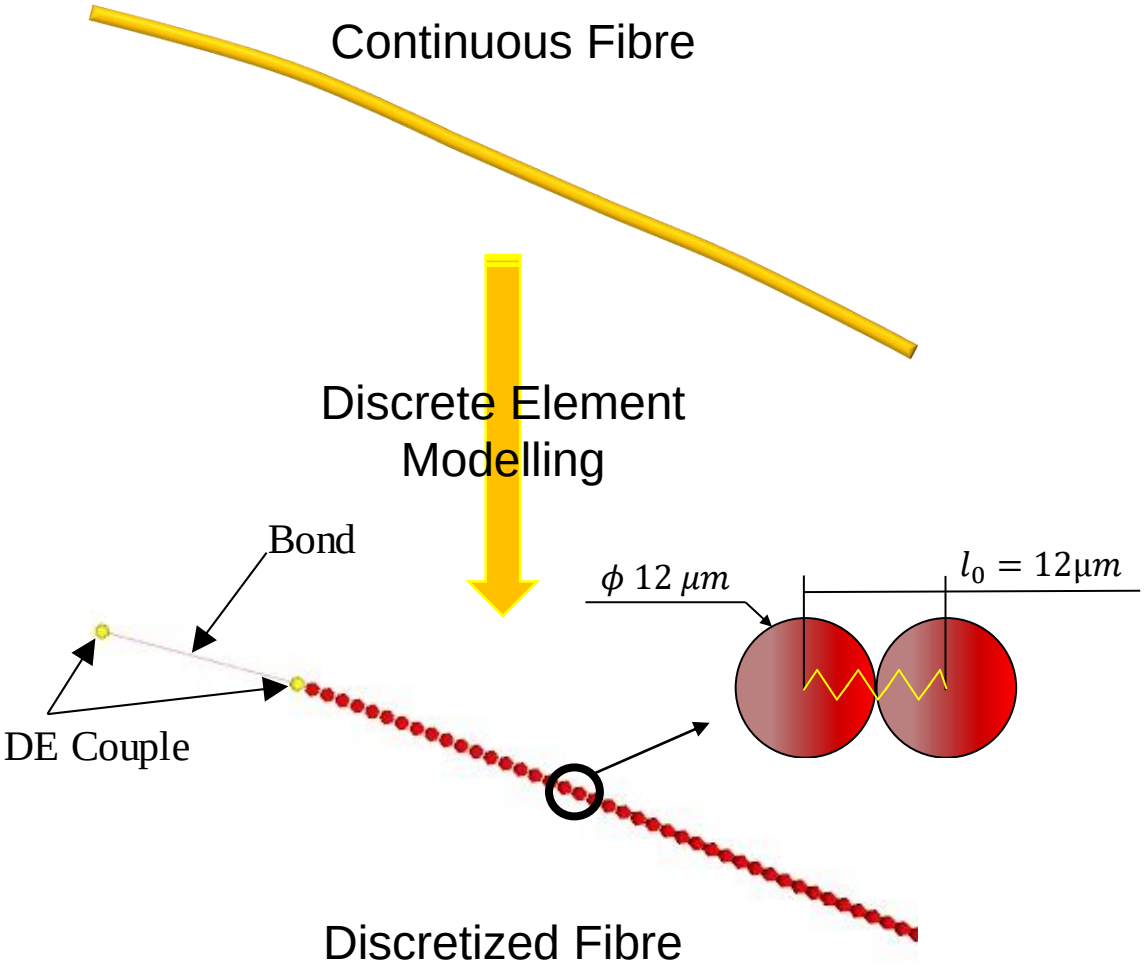

***References**

P. del Sorbo, 2017 J. Girardot, 2015 F. Dau, ASC-29, 2014.

Transversal Impact on Flexible Filaments : Bond Constitutive Behaviour

Kevlar® KM2 600 fibre has been modelled as **brittle and purely elastic**.

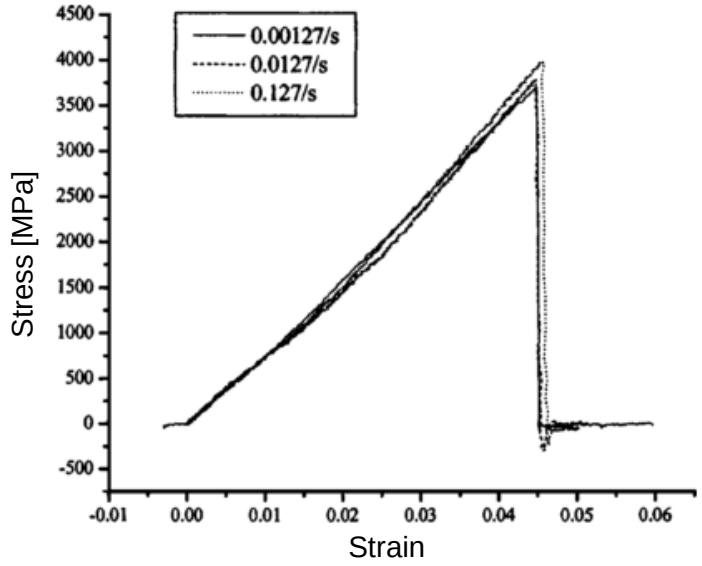

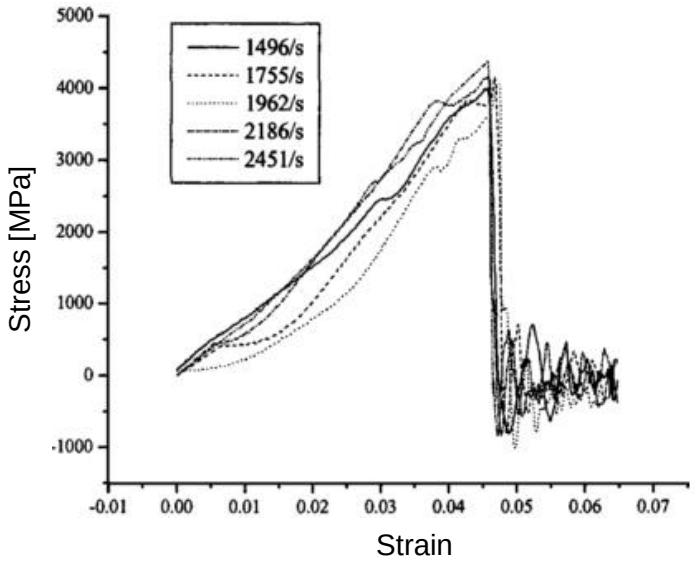

Longitudinal Elastic Response of Kevlar KM2 600 Single Fibre (Cheng 2005)

$$F = EA\varepsilon$$

$$\varepsilon = \frac{l - l_0}{l}$$

$$\varepsilon \geq \varepsilon_{lim}$$

$$Bond\ disabled$$

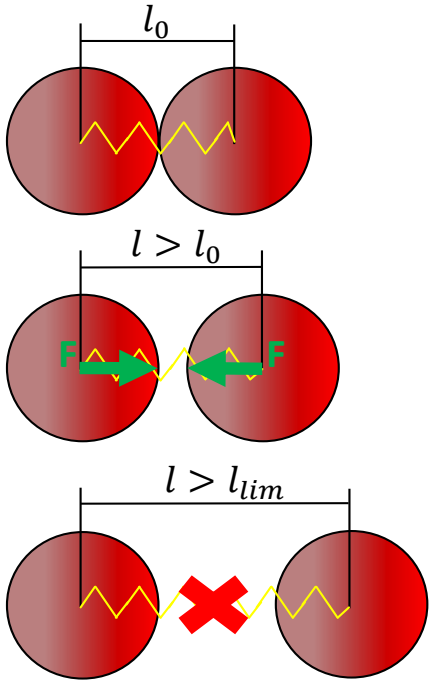

Pietro.DELSORBO@ensam.eu

Transversal Impact on Flexible Filaments : Contact Model

Contact is managed according to **Discrete Element Method**:

- **Non linear** contact relation (Cheng et al. 2005)
- **Poisson Effect is not considered**
- **No contact** if two elements are **bonded**
- **Coulombian Friction** model is adopted

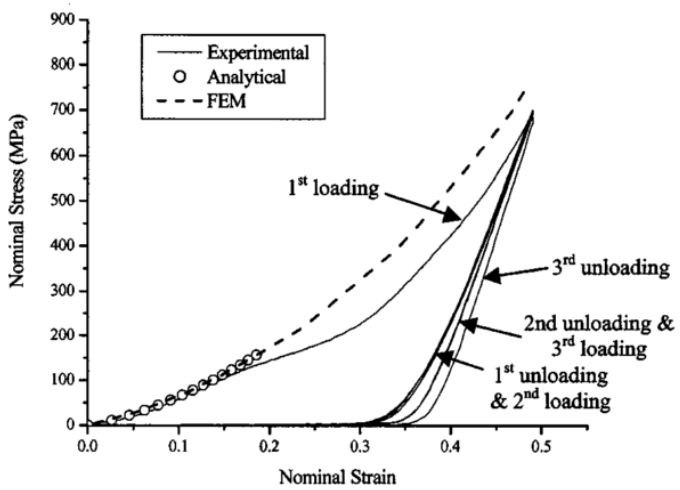

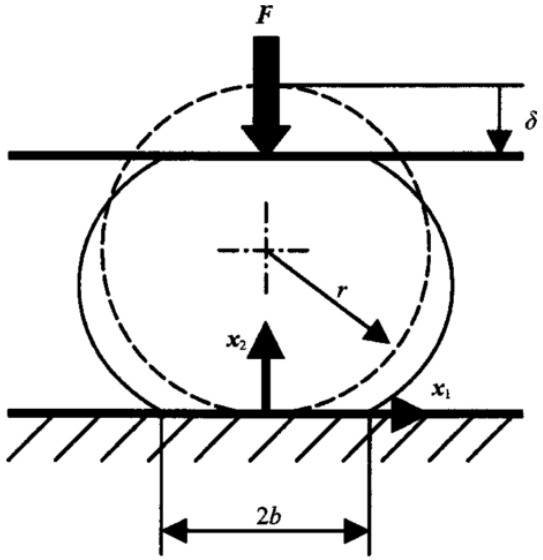

$$F = 2rl_0\sigma_n$$

$$\delta = 2r\epsilon_n$$

$$F = Indentation\ Force$$

$$F_f = Friction\ Force$$

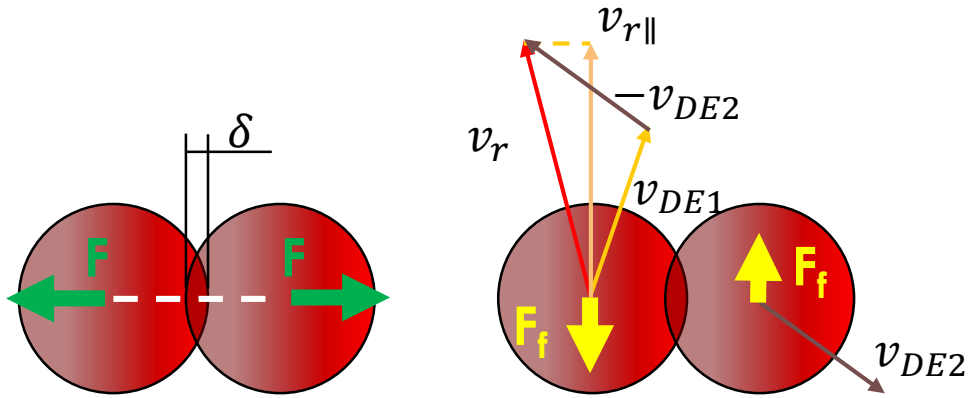

Pietro.DELSORBO@ensam.eu

Transversal Impact on Single Fiber: Set Up

Basic Hypotheses:

- Pure Axial behaviour
- No Contact -> No transverse effect
- Impact -> Boundary Conditions

Material:

Kevlar® KM2 600*

References

*M.Cheng et al., Journal of Engineering Materials and Technology, 2005

Numerical

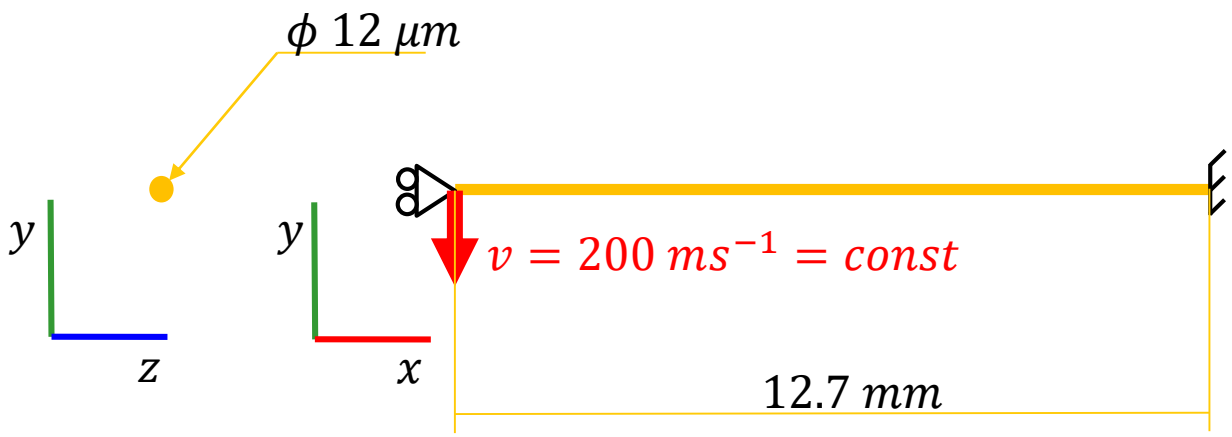

EQUIVALENTS

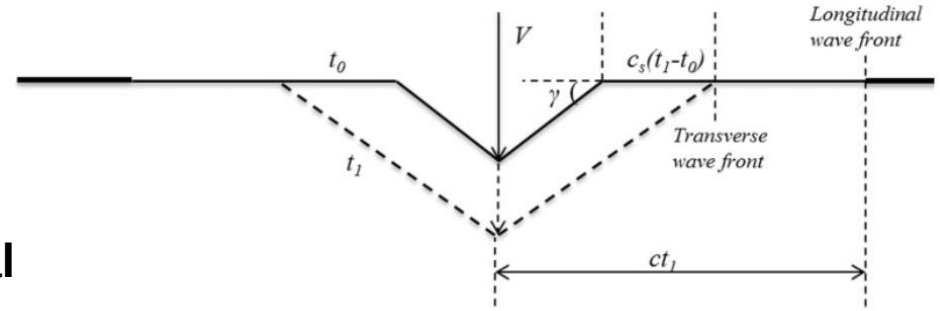

$$V = c\sqrt{2\epsilon\sqrt{\epsilon(1+\epsilon)} - \epsilon^2}$$

$$c_s = c\left(\sqrt{\epsilon(1+\epsilon)} - \epsilon\right)$$

$$c = \sqrt{\frac{E}{\rho}}$$

Analytical

Transversal Impact on Single Fibre: Results

Material:

Kevlar® KM2 600*

$E_{11} = 84.62\ GPa$

$\sigma_{lim} = 3.88\ GPa$

$\rho = 1440\ kg/m^3$

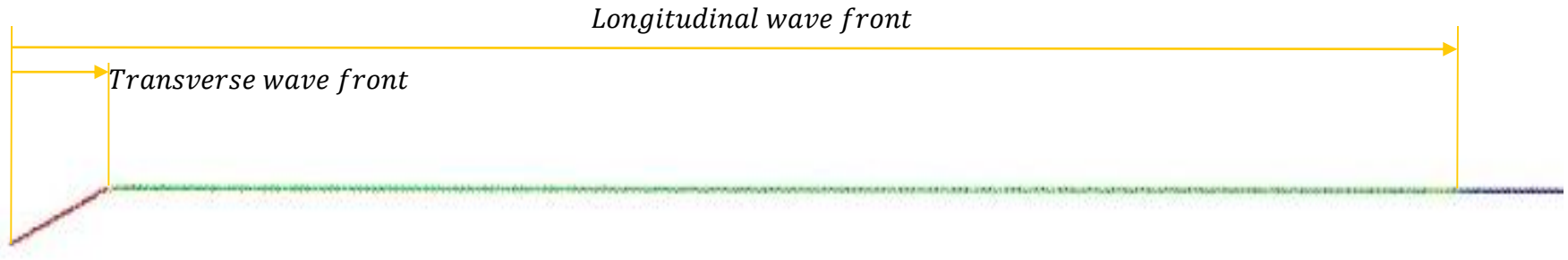

Induced Strain		Eul. Tran. Wave Speed	Lag. Long. Wave Speed
Model	0.4982 %	505 m/s	7656 m/s
Smith Th.	0.4984 %	504.2 m/s	7665 m/s
Rel. Err.	0.04%	0.3%	0.1%

VALIDATED !!!

References

*M.Cheng et al., Journal of Engineering Materials and Technology, 2005

Transversal Impact on Single Yarn Long Period Analysis (0−50μs)

Material:

Kevlar® KM2 600**

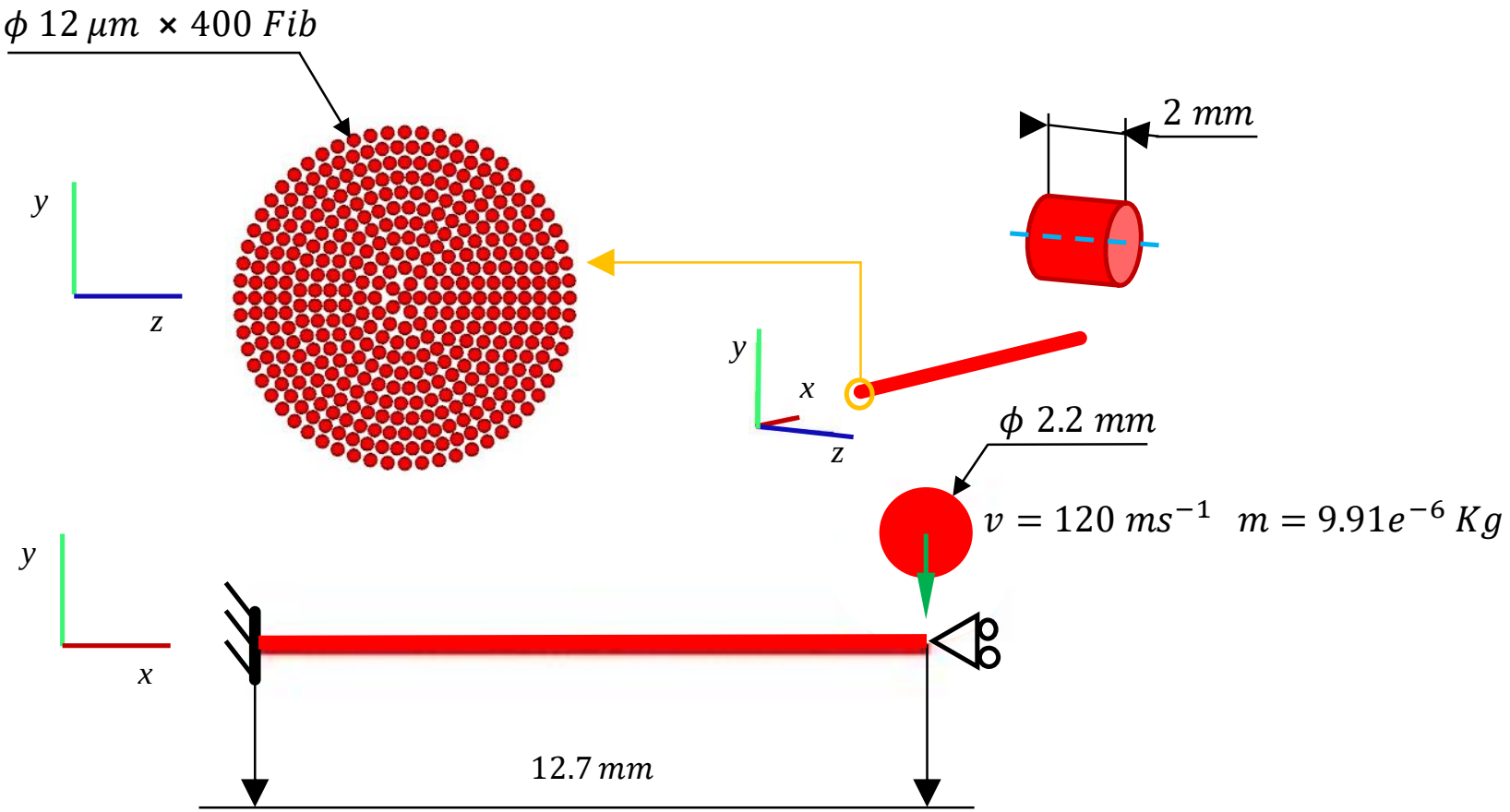

References

*G.Nilakantan, Composite Structures , 2013

**M.Cheng et al., Journal of Engineering Materials and Technology, 2005

Transversal Impact on Single Yarn Long Period Analysis (0−50μs)

Cheng, 2005

$E_{11} = 84.62\ GPa$

$\sigma_{lim} = 3.88\ GPa$ $\quad \mu_{ff} = 0.2$

$\rho = 1440\ kg/m^3$ $\quad \mu_{fp} = 0.18$

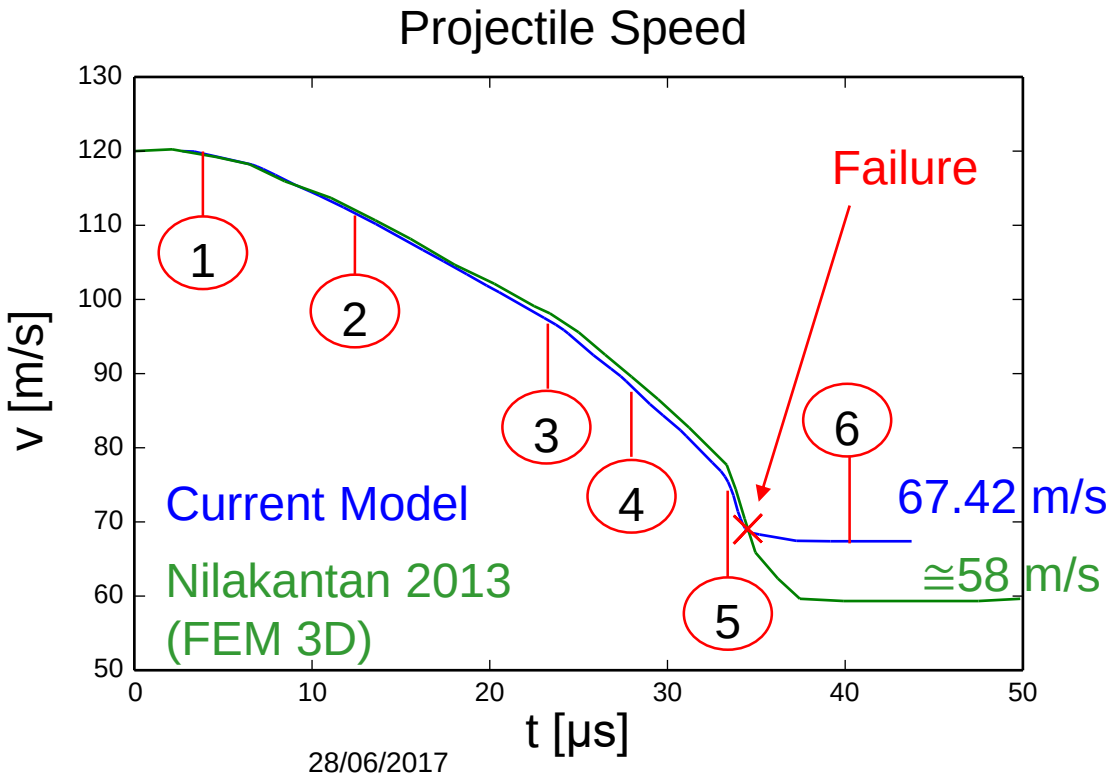

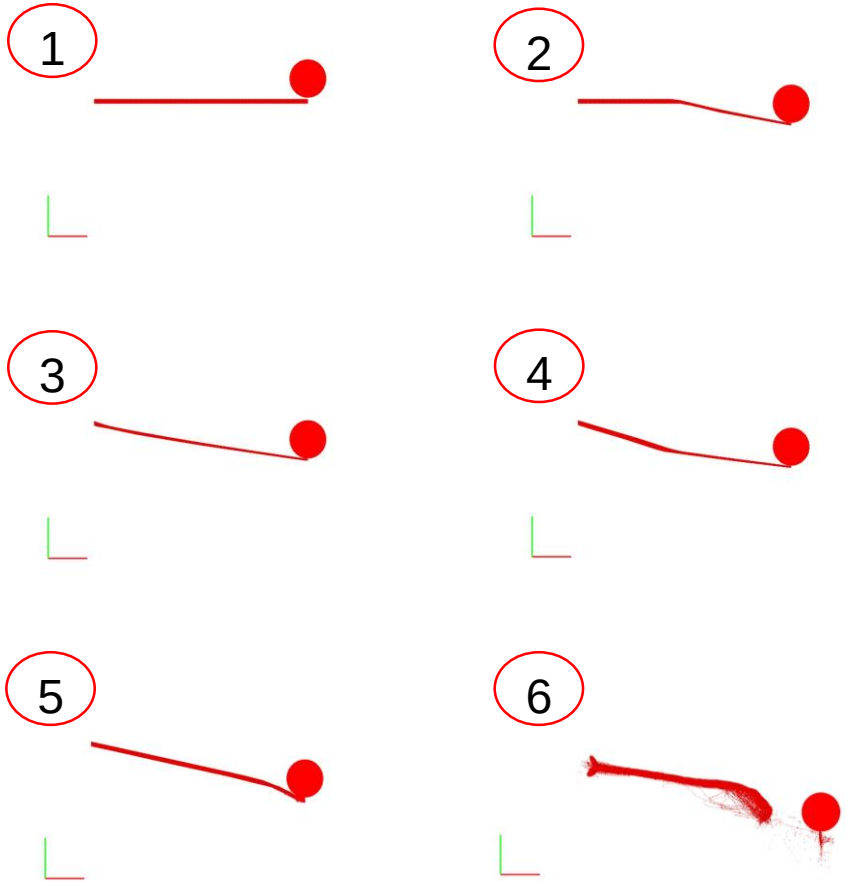

Pietro.DELSORBO@ensam.eu

Transversal Impact on Single Yarn Long Period Analysis (0−50μs)

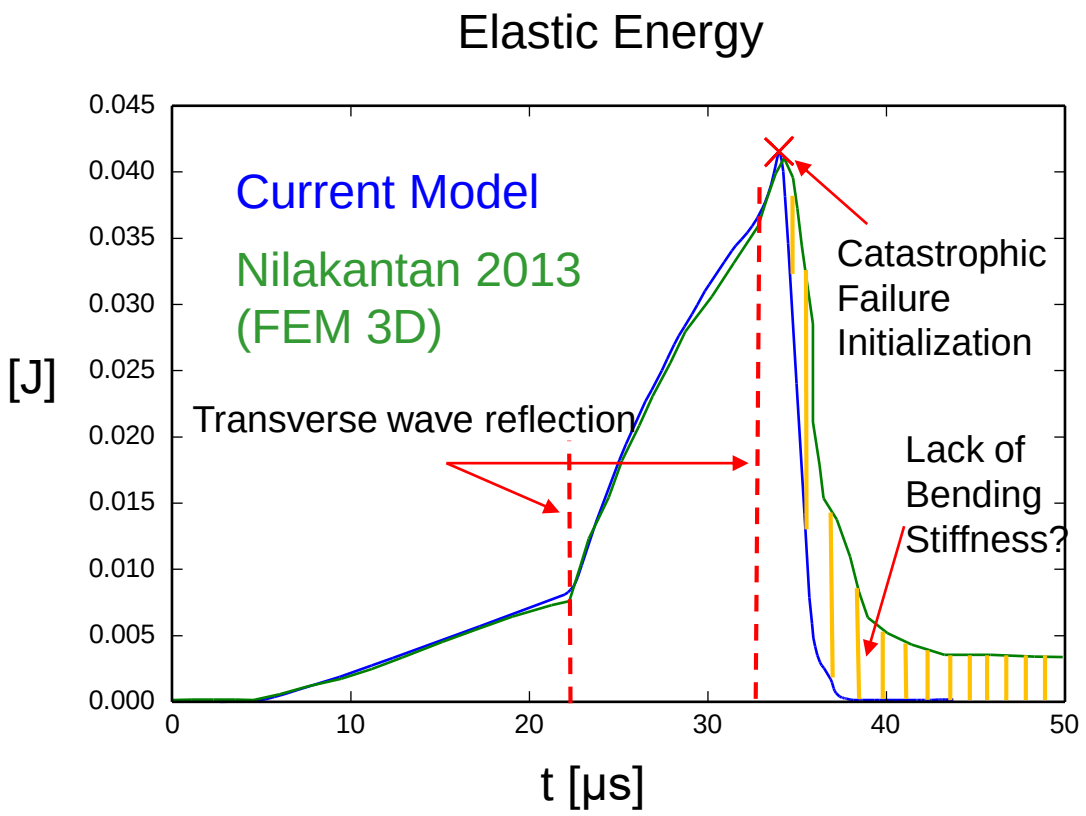

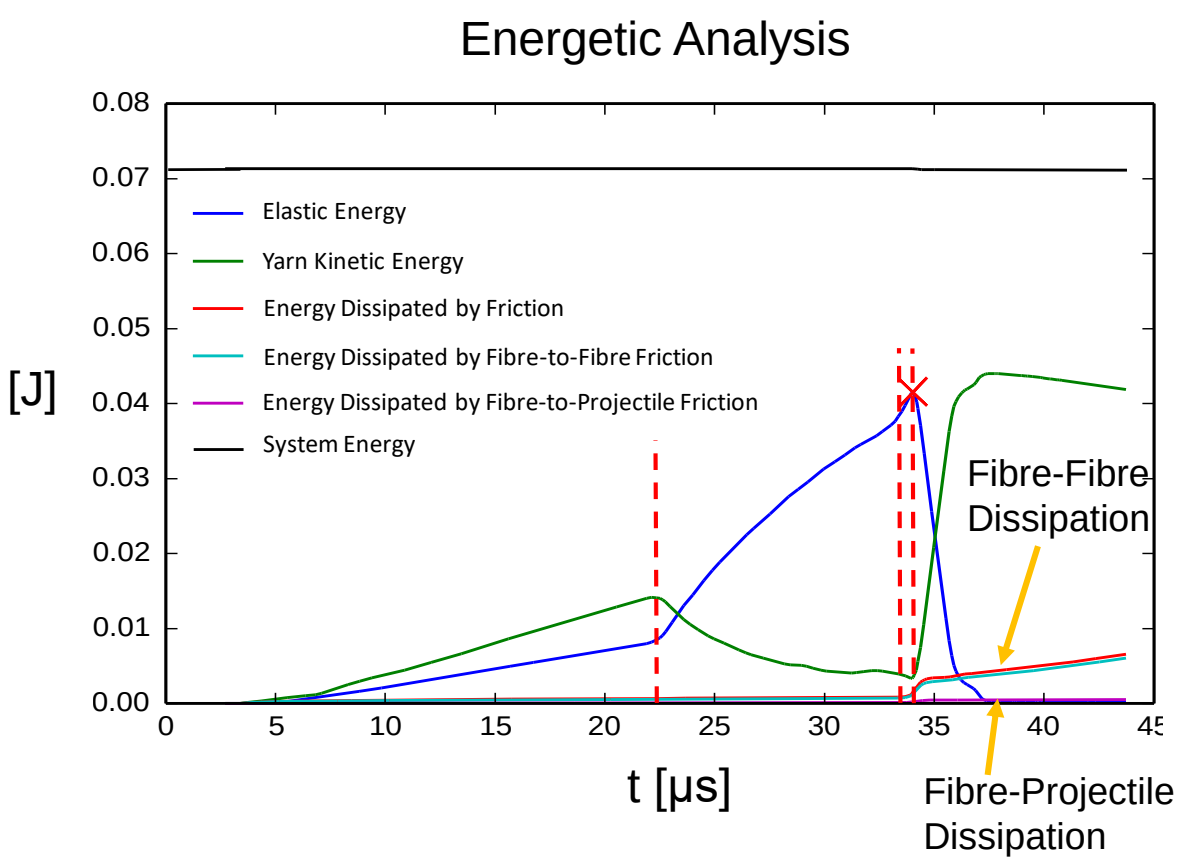

Pietro.DELSORBO@ensam.eu

Transversal Impact on Single Yarn Short Period Analysis $(0-2\mu s)$

Material:

Kevlar® KM2 600*

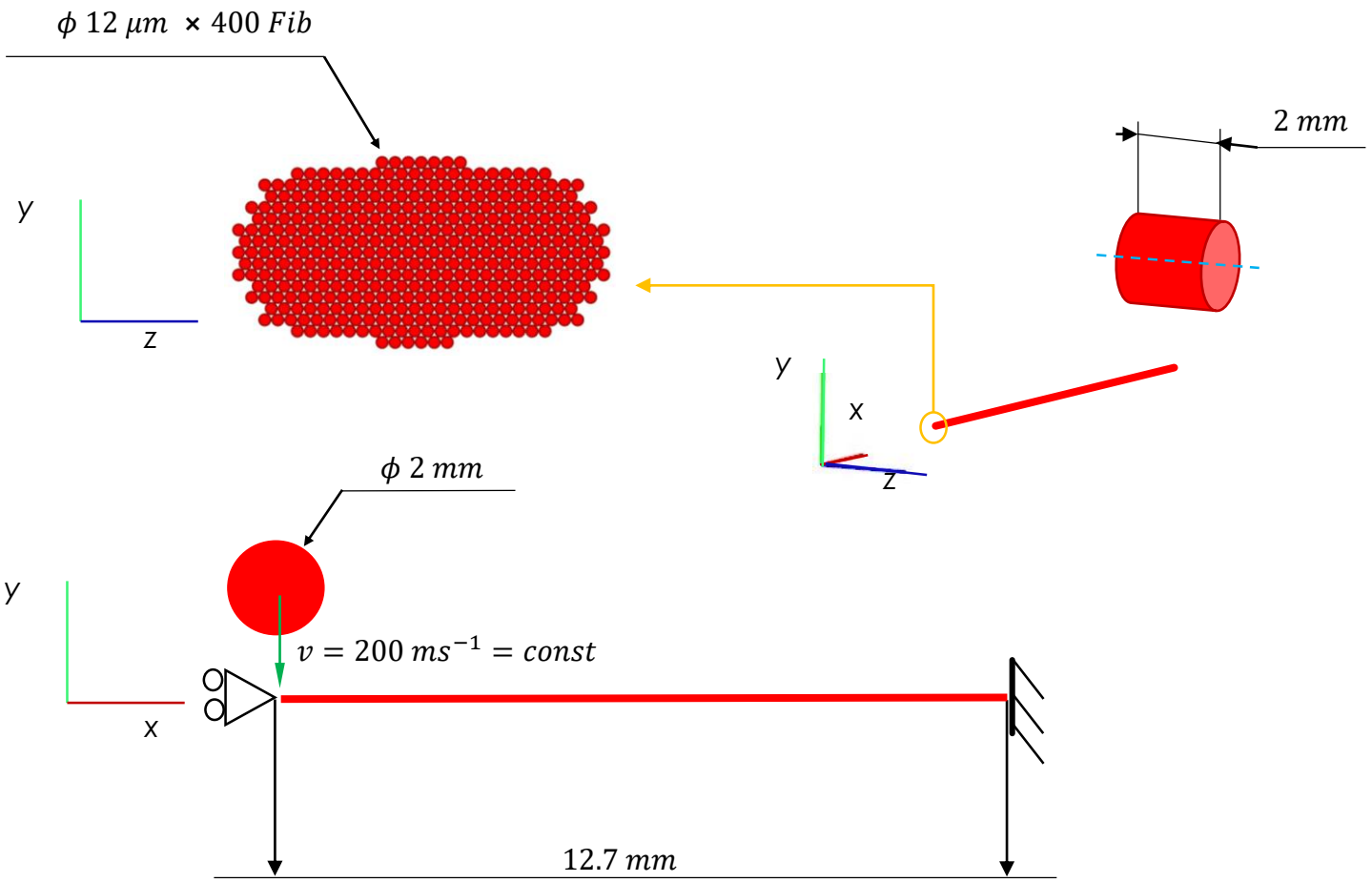

References

*M.Cheng et al., Journal of Engineering Materials and Technology, 2005

Pietro.DELSORBO@ensam.eu

Transversal Impact on Single Yarn Short Period Analysis $(0-2\mu s)$

Transversal Yarn behaviour :

- **Wave propagation phenomena**
- **Quantification of bounce velocity**

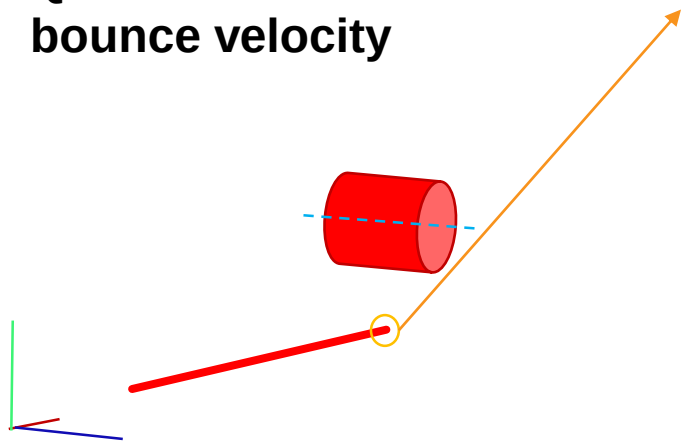

Particle Velocity [m/s]

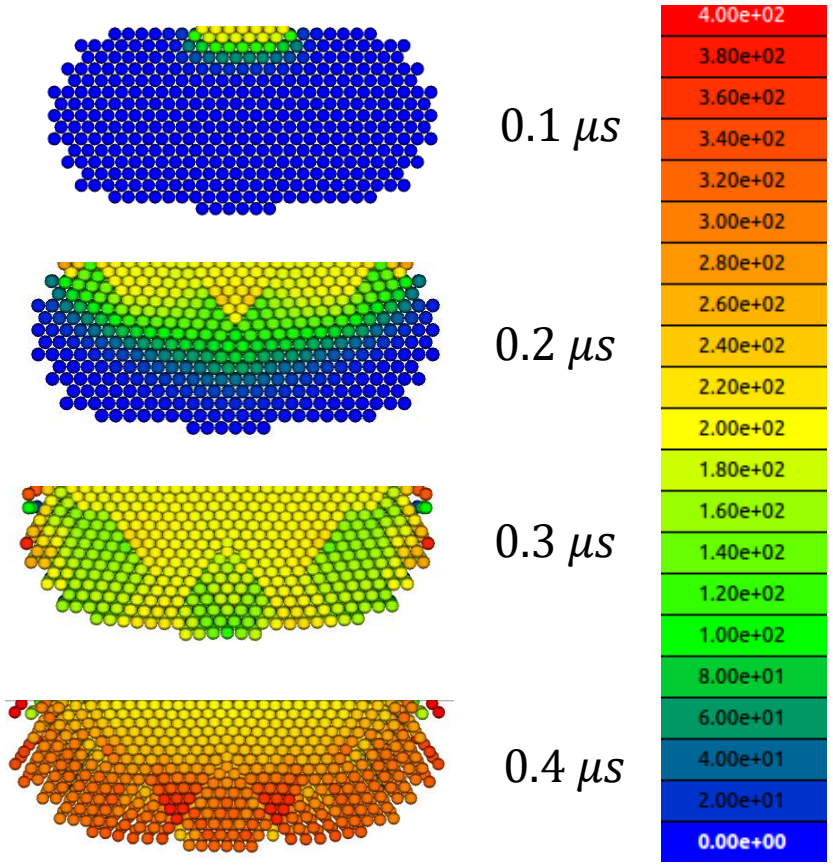

Large Deformations

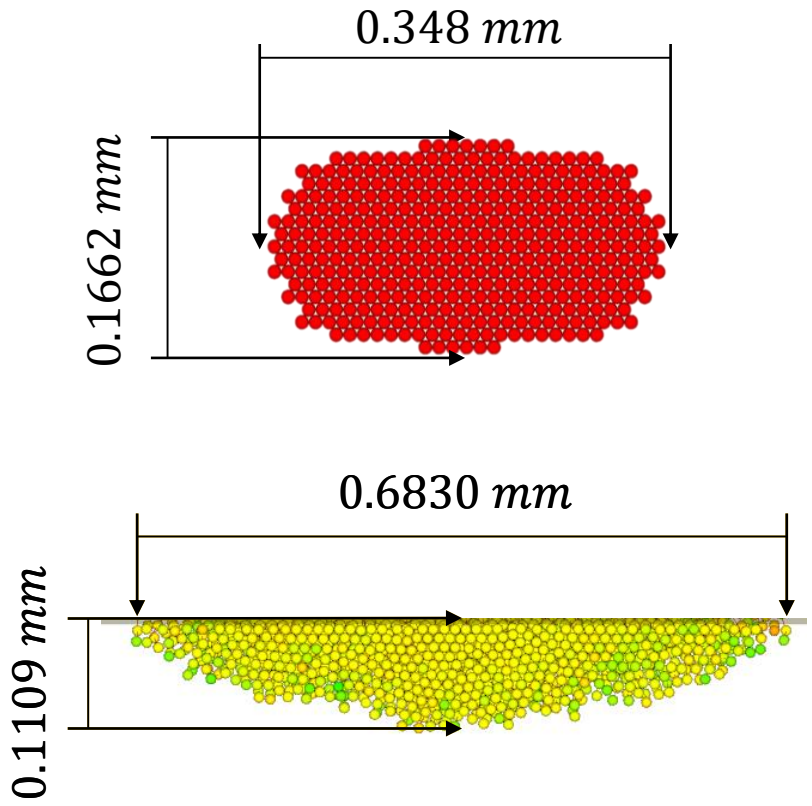

Pietro.DELSORBO@ensam.eu

Transversal Impact on Single Yarn Short Period Analysis $(0-2\mu s)$

Longitudinal wave :

- **3D** wave front
- **Local stresses up to 100% higher** than the analytical solution

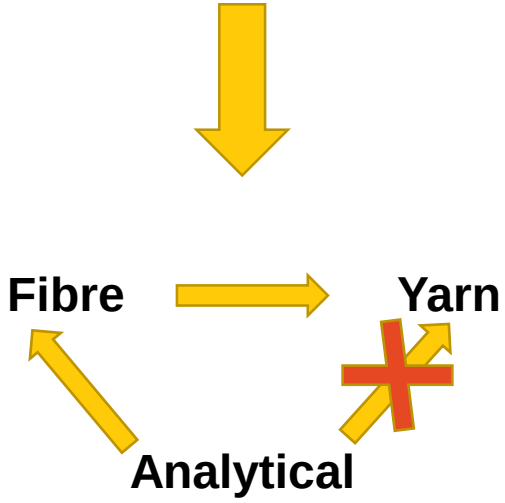

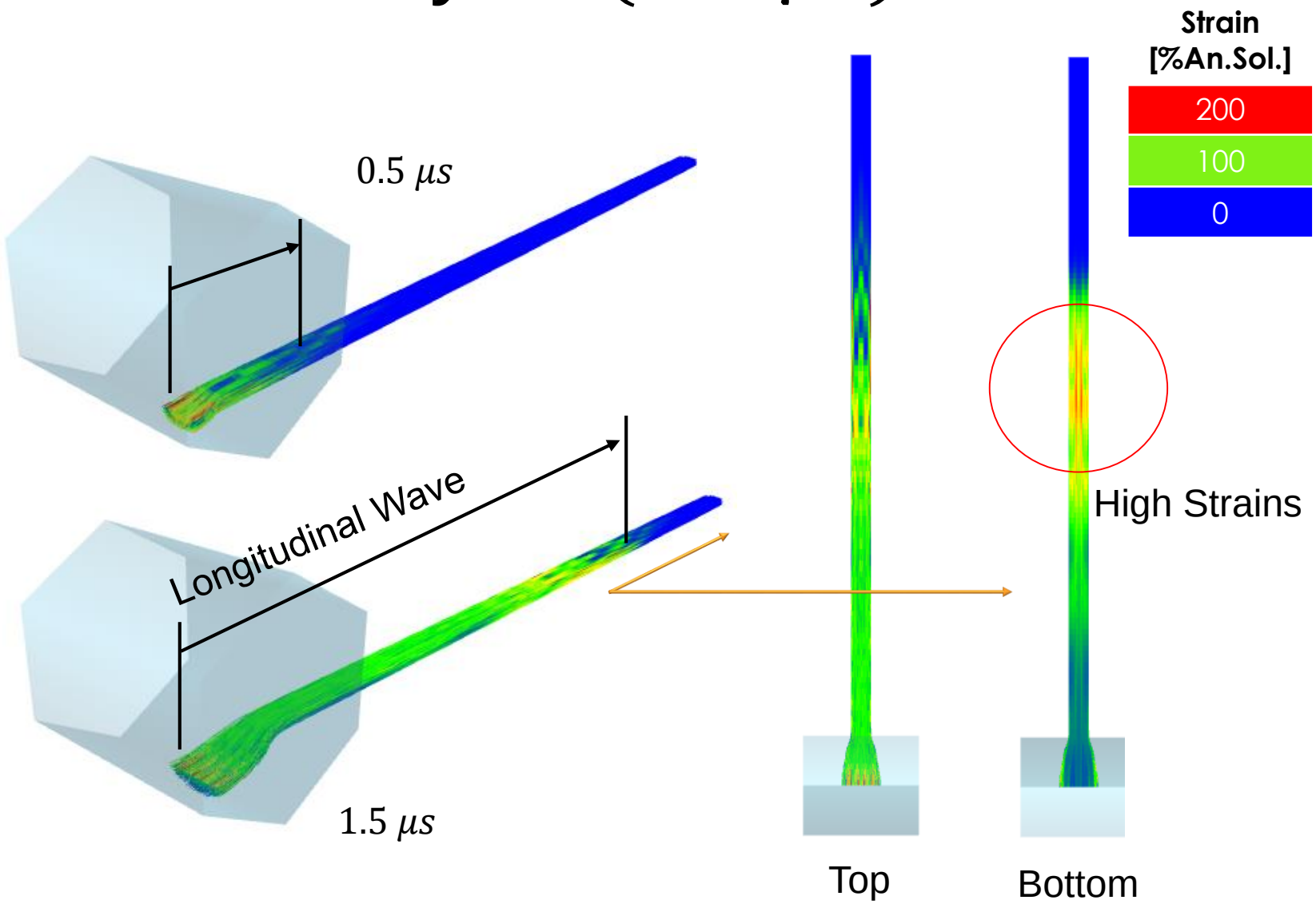

Pietro.DELSORBO@ensam.eu

CONCLUSIONS

- Novel numerical approach for microscopic analysis
- Yarn response to the impact have been investigated
- Influence of yarn discrete nature have been accounted
- Limits of the traditional approaches have been enhanced

Pietro.DELSORBO@ensam.eu

PERSPECTIVES

- Consistent continuum model
  - Hyperelastic constitutive behaviour
  - Microscopic virtual material testing
- Numerical analyses of yarns with geometric complexities
  - Twisting
  - Braiding
- Mesoscale Applications

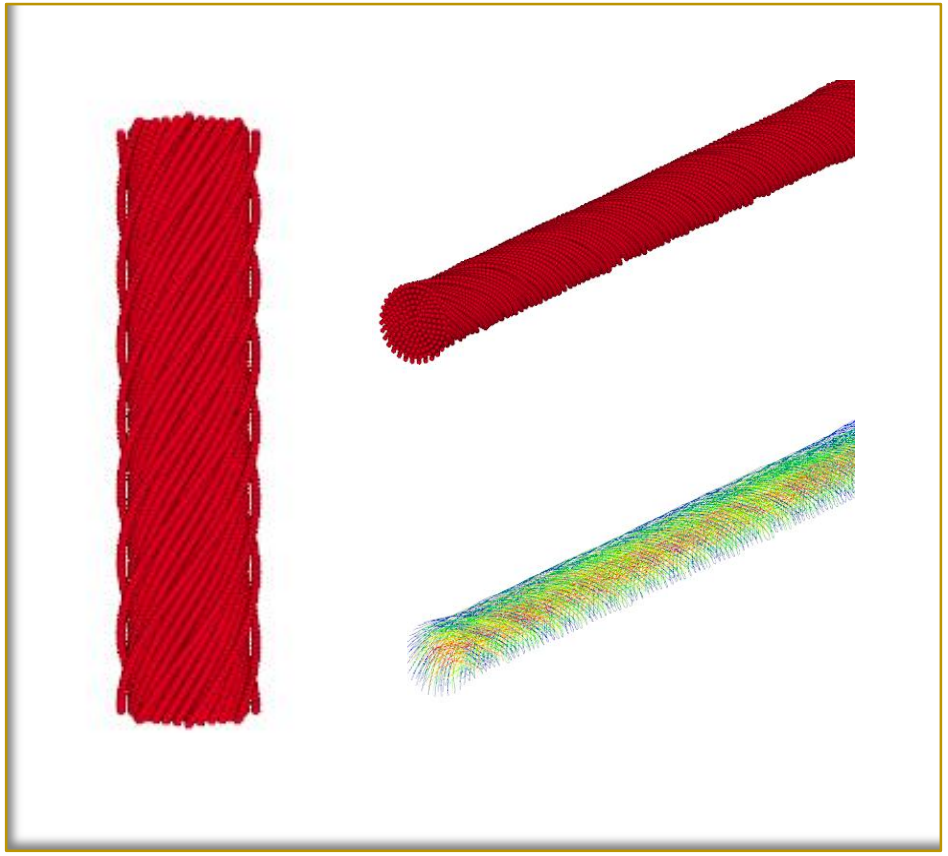

Pietro.DELSORBO@ensam.eu

Thank You for Your Attention

Pietro.DELSORBO@ensam.eu

Full Scale Microscopic Model: Results

An energetic analysis has been performed to **compare numerical to the analytical results:**

- **Contact effects** accounted
- Different global **wave reflection times**

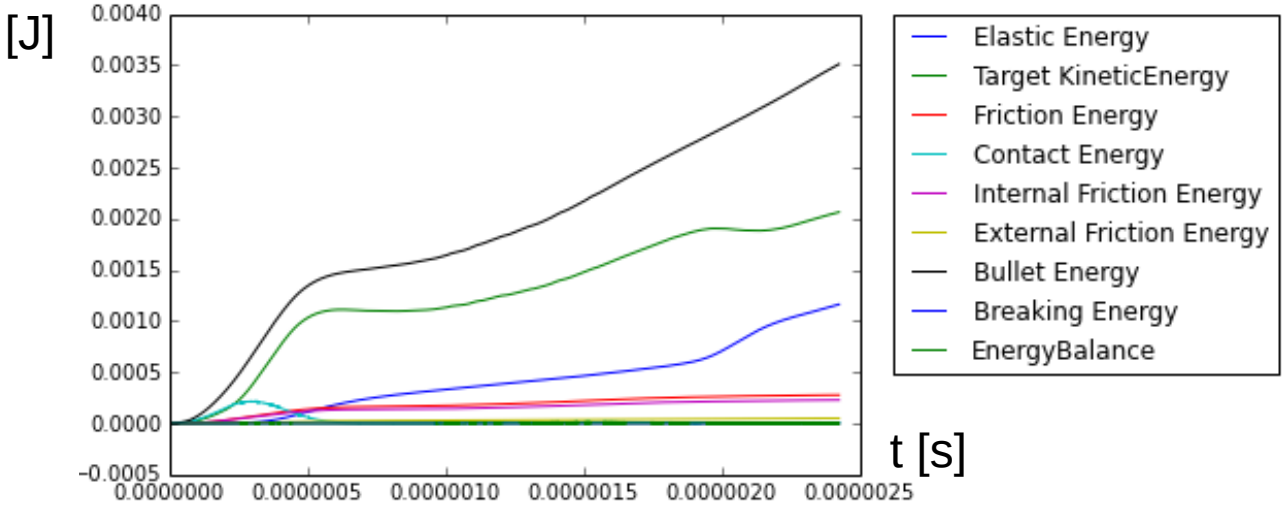

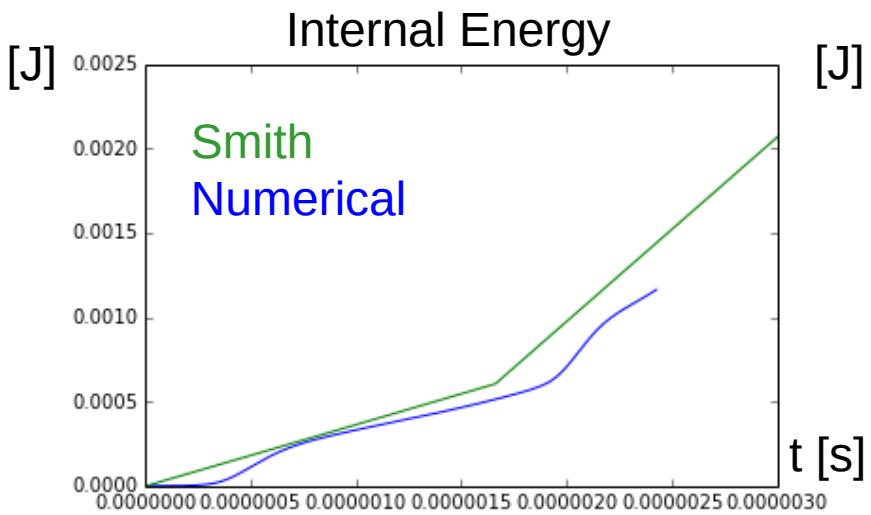

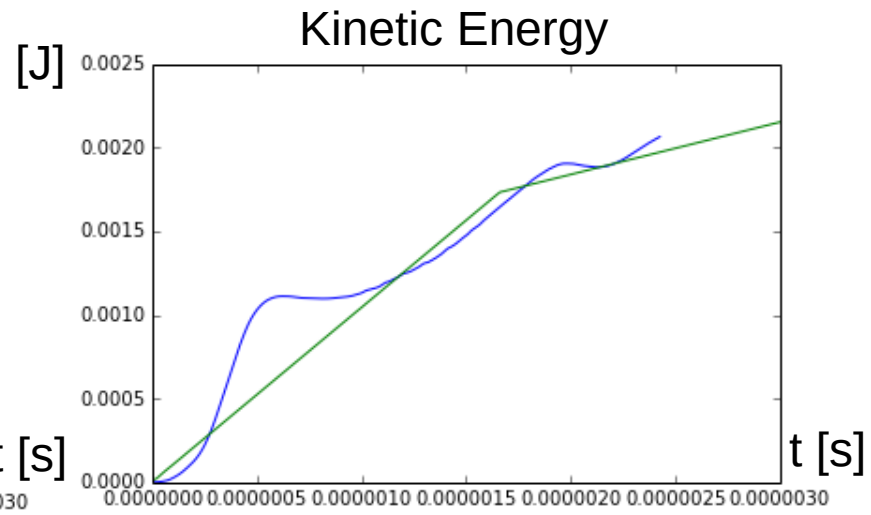

Pietro.DELSORBO@ensam.eu

Appendix 3

Material Properties	GranOO Spring Model	Nilakantan (2013)
Material Model	Isotropic-Linear Elastic	Transversally Isotropic-Linear Elastic
Young Modulus Axial E_{33}	$84.6\ GPa$	$84.6\ GPa$
Young Modulus Transversal E_t	/	$1.34\ GPa$
Torsional Shear Modulus G_{13}	/	$24.40\ GPa$
υ_{31}	/	0.60
υ_{12}	/	0.24
Density	$1440\ Kg/m^3$	$1440\ Kg/m^3$
Limit Stress	$3.88\ GPa$	$3.88\ GPa$

Set up	GranOO Models	Nilakantan (2013)
Model	Symmetric	Complete
Nr. Fibres	400	400
Yarn Length	$25.4mm$	$25.4mm$
Fibre Diameter	$12\mu m$	$12\mu m$

Contact	GranOO Models	Nilakantan (2013)
Bullet-Fibres Friction	0.18	0.18
Fibres-Fibres Friction	0.20	0.20
Contact Stiffness	$5e^5\ N/m$	n.d.

Bullet	GranOO Models	Nilakantan (2013)
Shape	Cylindrical	Cylindrical
Mass	$9.91\ mg$	$9.91\ mg$
Velocity	$120\ m/s$	$120\ m/s$
Radius	$1.1\ mm$	$1.1\ mm$